Note

Available at pCon PLANNER

Mobile whiteboard

Design: Lauri Visnapuu

Make room for big ideas. Use our convenient mobile whiteboard to utilise every brainstorming opportunity. Equipped with 360-degree wheels, you can take the whiteboard wherever fresh ideas are born.

The back of the whiteboard is optionally covered with cutting-edge acoustic felt. Given its sound-absorbing qualities and notable height, the board can be transformed into a privacy screen, showcasing our love for multifunctional furniture.

Collaboration Zone

Concentration Zone

Minimize workplace noise

Divide your office on the go

Wheel the board around for creative collaboration

PRODUCT INFORMATION

Warranty
5 years

Legs
360° rotating and lockable castors

Sustainability
Based on principles of the circular economy

Certification

FSC
www.fsc.org
FSC™C170945
Look out for our FSC-certified products

STANDARD MATERIALS

Whiteboard
High-pressure decorative laminate

Panel
MDF, upholstered with batting and covered with acoustic felt on request

Legs
Powder-coated metal

Marker Holder
Varnished solid oak

Fabric upholstery
The cover fabric is not removable
Choose any fabric from **Intuit Standard Fabric Collection**

Additional information
As part of after-sales service we offer the change of cover fabric and all other components if needed

FINISHING OPTIONS

Legs

Powder-coated metal

Jet Black RAL 9005

Other finishing options available on request.

DIMENSIONS

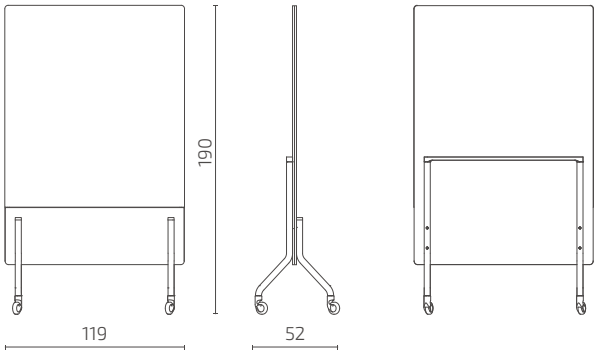

S124-MWH190

All dimensions provided in centimetres.