Hektor

Playful modular seating system

Design: Lauri Visnapuu

Designed for dynamic public and shared spaces, Hektor is a modular seating system built around soft, hexagonal forms that invite movement, interaction and flexible use. The playful geometry allows organic, non-linear configurations that work equally well as flowing seating landscapes or as individual standalone seats.

Available in three module heights — from low poufs to higher-backed elements — Hektor enables zoning, visual variation and optional privacy within open environments. Its generously upholstered, soft construction makes it comfortable for extended waiting, informal meetings or relaxed social moments.

Welcome Zone

Social Zone

Support comfort and interaction

Zone space with soft forms

Create organic seating layouts

PRODUCT INFORMATION

Versions
Available in 3 heights

Modularity
Modules can be connected together

Warranty
5 years

Sustainability
Based on principles of the circular economy

Certification

FSC
www.fsc.org
FSC™C170945
Look out for our FSC-certified products

STANDARD MATERIALS

Frame
Plywood

Seat and backrest
Durable HR foam; fire retardant HR foam on request

Fabric upholstery
The cover fabric is removable
Choose any fabric from Intuit **Standard Fabric Collection**

Additional information
As part of after-sales service we offer the change of cover fabric and all other components if needed

Ideal for airports, cultural venues, educational institutions and office lobbies, Hektor **brings structure and warmth** to high-traffic areas while offering architects freedom to shape space intuitively.

DIMENSIONS

Seat depth: 51 cm

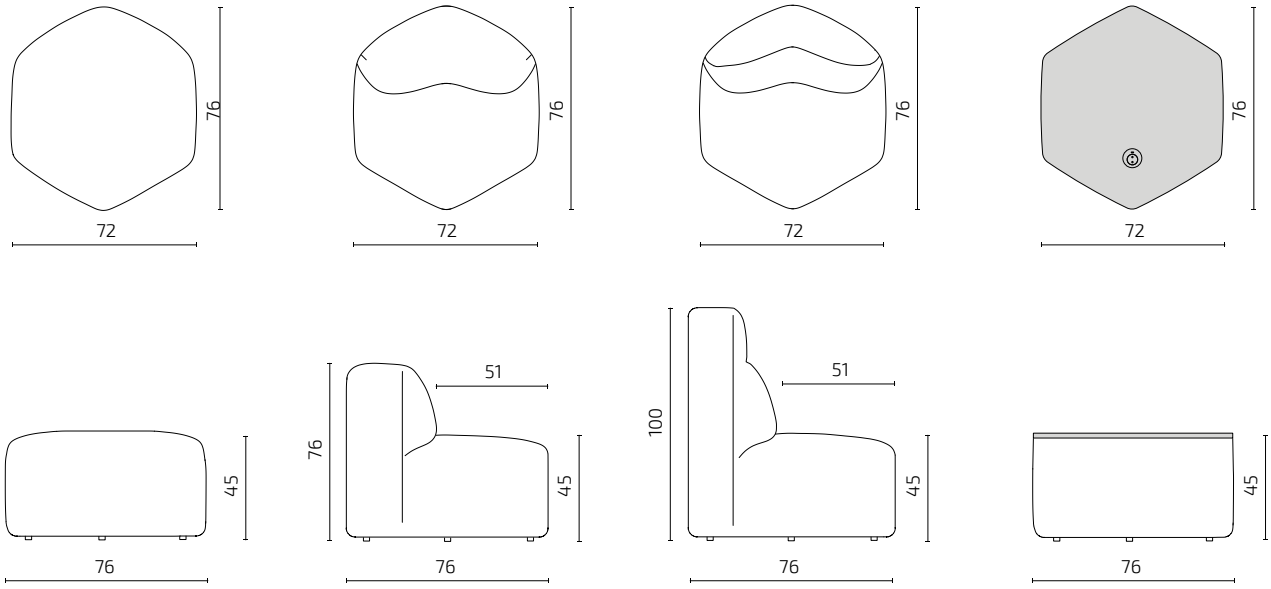

S81-F1 **S81-1H1** **S81-1H2** **S81-T1**

All dimensions provided in centimetres.