August Wall

Available at pCon PLANNER

Sound-absorbing wall panelling and bench

Design: Pent Talvet, Iseasi

Soft August Wall panels with a separate pouffe add a playful touch to the August range. Sound-absorbing panels help improve the acoustic properties of open rooms. Use the August Wall and bench combination to create areas of circulation, where colleagues can have encounters that brighten their day.

Welcome Zone

Social Zone

Make your visitors feel at home

Make connections with colleagues

Cut down on background noise

PRODUCT INFORMATION

Versions
Available in 2 different modules

Warranty
5 years

Sustainability
Embraces the principles of circular design

Test & Certification
L1 European Standard strength, durability and safety certificate

FSC
www.fsc.org
FSC™C170945
Look out for our FSC-certified products

STANDARD MATERIALS

Frame
Solid wood and plywood

Seat & backrest
Durable HR foam; fire retardant HR foam on request

Legs
Solid oak / Powder-coated metal

Fabric upholstery
The cover material is not removable
Choose any fabric from **Intuit Standard Fabric Collection**

Additional information
As part of after-sales service we offer the change of cover fabric and all other components if needed

LEGS

Solid oak legs, stained and varnished;
anti-slip soles

Matt powder-coated metal legs;
anti-slip soles

Solid oak

Whitened	
Natural	
Wenge	
Black	

Powder-coated metal

Jet Black RAL 9005	

Other finishing options available on request.

PRODUCT CONSTRUCTION

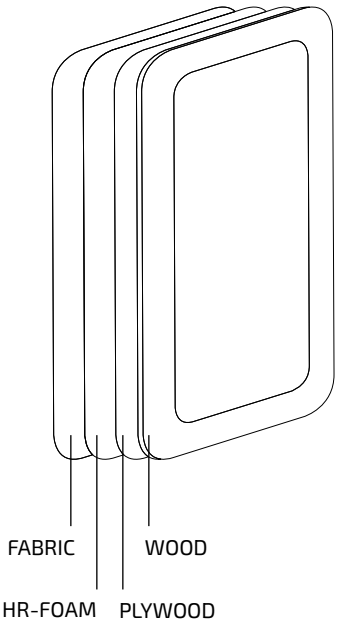

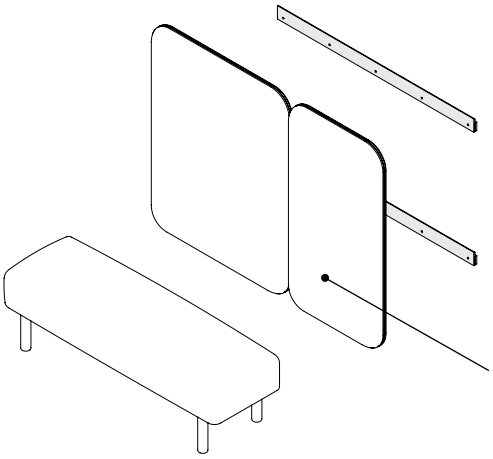

August Wall is **a separate panel**
to be installed on the wall

DIMENSIONS

August bench
Seat depth: 48 cm

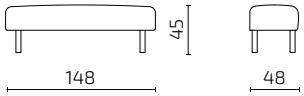

S101-F25

Wall panel

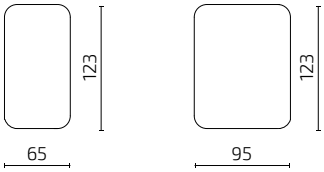

S101-WS **S101-WM**

All dimensions provided in centimetres.